REPLACING THE TIRE SHELL

IMPORTANT— FOR SIMPLICITY THE MOTOR AND BRAKE LEADS ARE NOT SHOWN FULL LENGTH.

DO NOT CUT LEADS OR REMOVE CONNECTORS.

REMOVE THE MOTOR SIDE AXLE NUTS AND WASHER

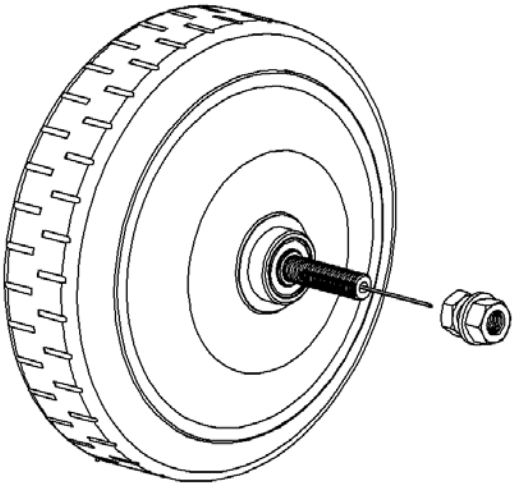

REMOVE THE EIGHT (8) BRAKE SIDE CASE SCREWS

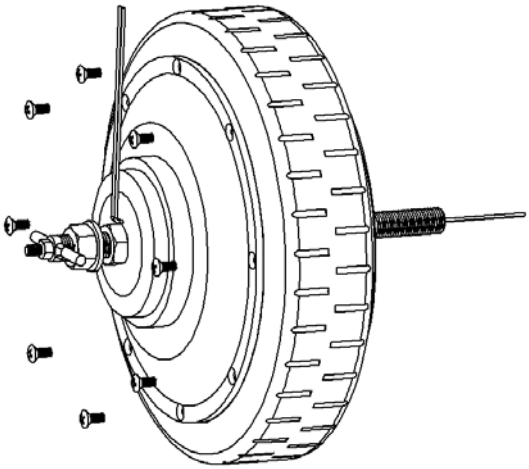

REMOVE MOTOR/GEAR BOX FROM TIRE SHELL.

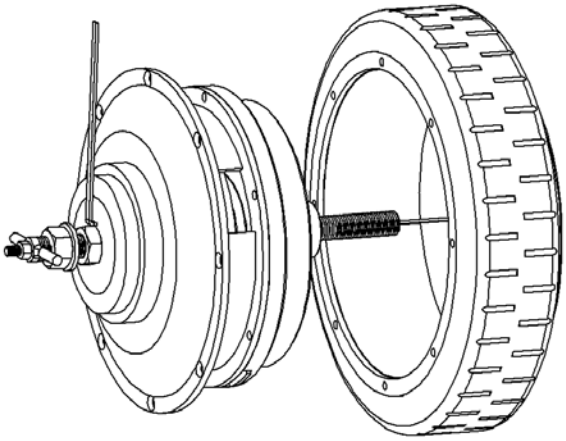

USING A NEW TIRE SHELL REASSEMBLE BY REVERSING THE ABOVE PROCEDURE.